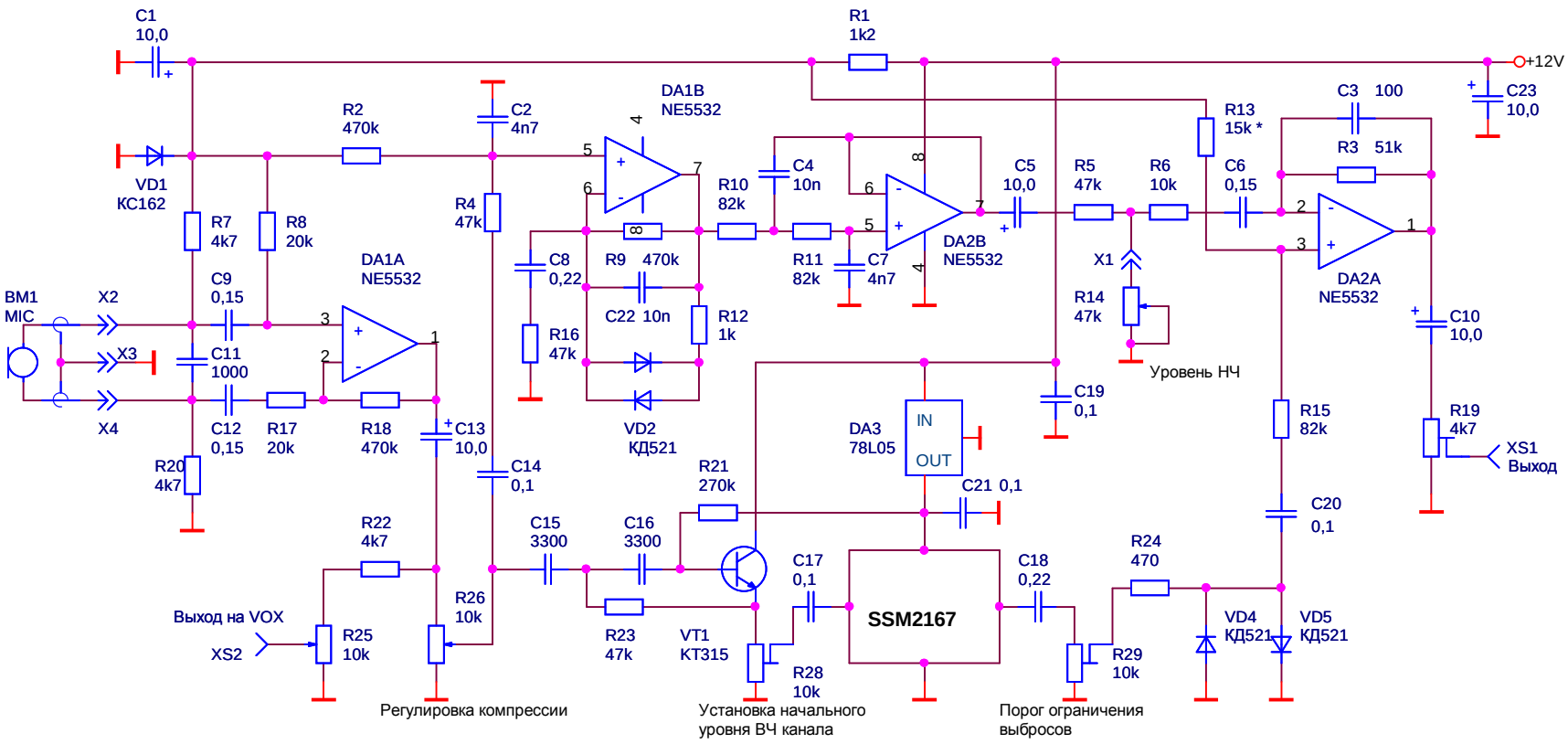

Title <Title>		
Size A	Document Number <Doc>	Rev <RevCode>
Date: Sunday, November 02, 2008	Sheet 1 of 1	

PDF created with pdfFactory Pro trial version www.pdffactory.com