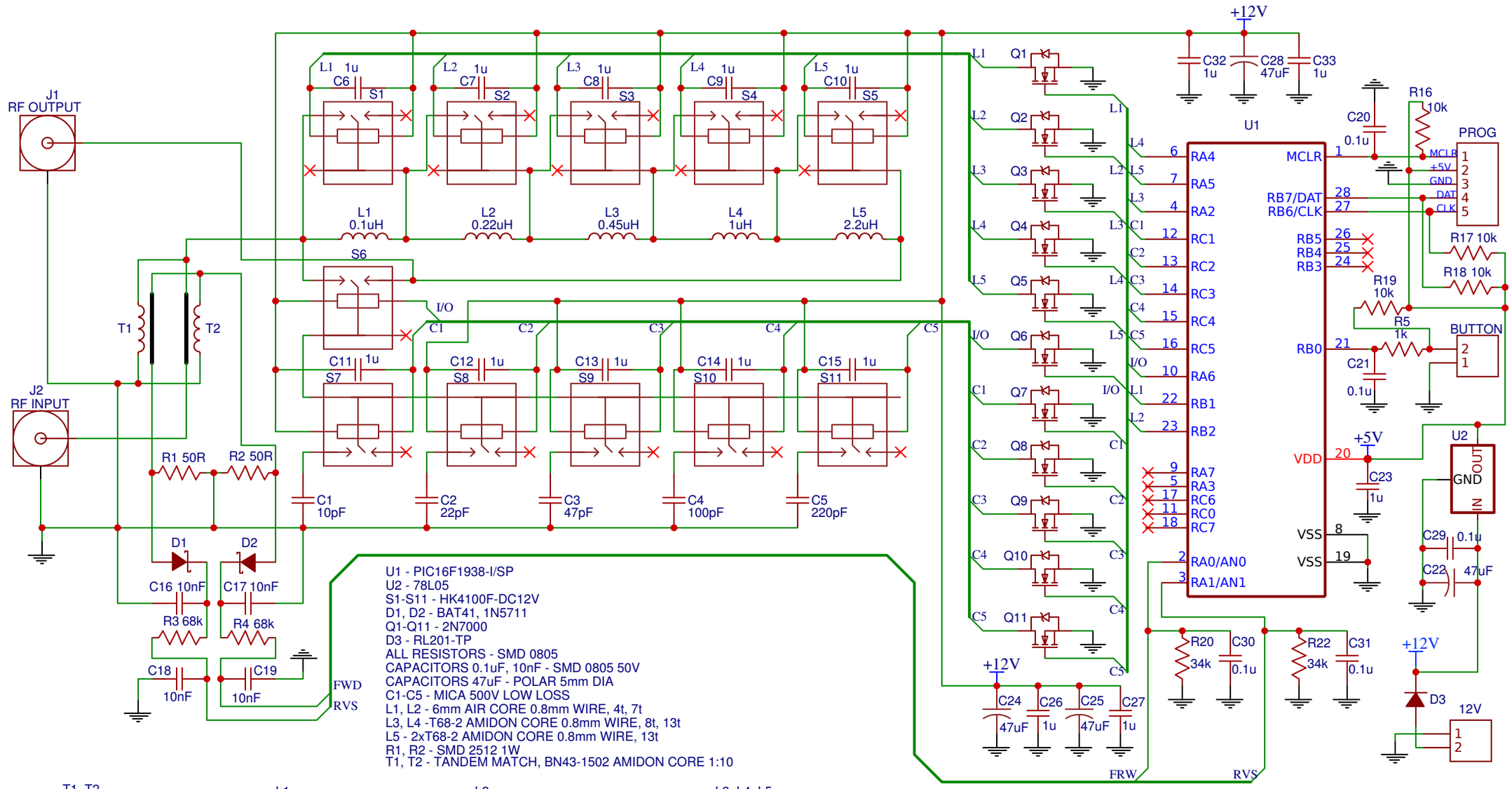

U1 - PIC16F1938-I/SP
U2 - 78L05
S1-S11 - HK4100F-DC12V
D1, D2 - BAT41, 1N5711
Q1-Q11 - 2N7000
D3 - RL201-TP
ALL RESISTORS - SMD 0805
CAPACITORS 0.1uF, 10nF - SMD 0805 50V
CAPACITORS 47uF - POLAR 5mm DIA
C1-C5 - MICA 500V LOW LOSS
L1, L2 - 6mm AIR CORE 0.8mm WIRE, 4t, 7t
L3, L4 -T68-2 AMIDON CORE 0.8mm WIRE, 8t, 13t
L5 - 2xT68-2 AMIDON CORE 0.8mm WIRE, 13t
R1, R2 - SMD 2512 1W
T1, T2 - TANDEM MATCH, BN43-1502 AMIDON CORE 1:10

T1, T2

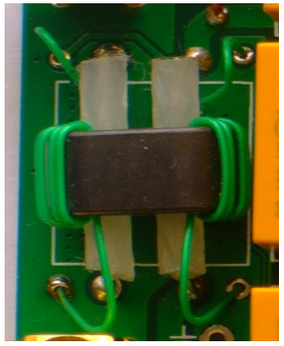

L1

L2

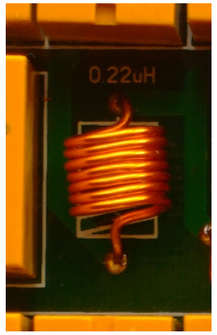

L3, L4, L5

TITLE: ATU-100 (mini board) by N7DDC	REV: 1.0
Date: 2018-08-11	Sheet: 1/1
EasyEDA V3.12.1	Drawn By: D. Fainitski