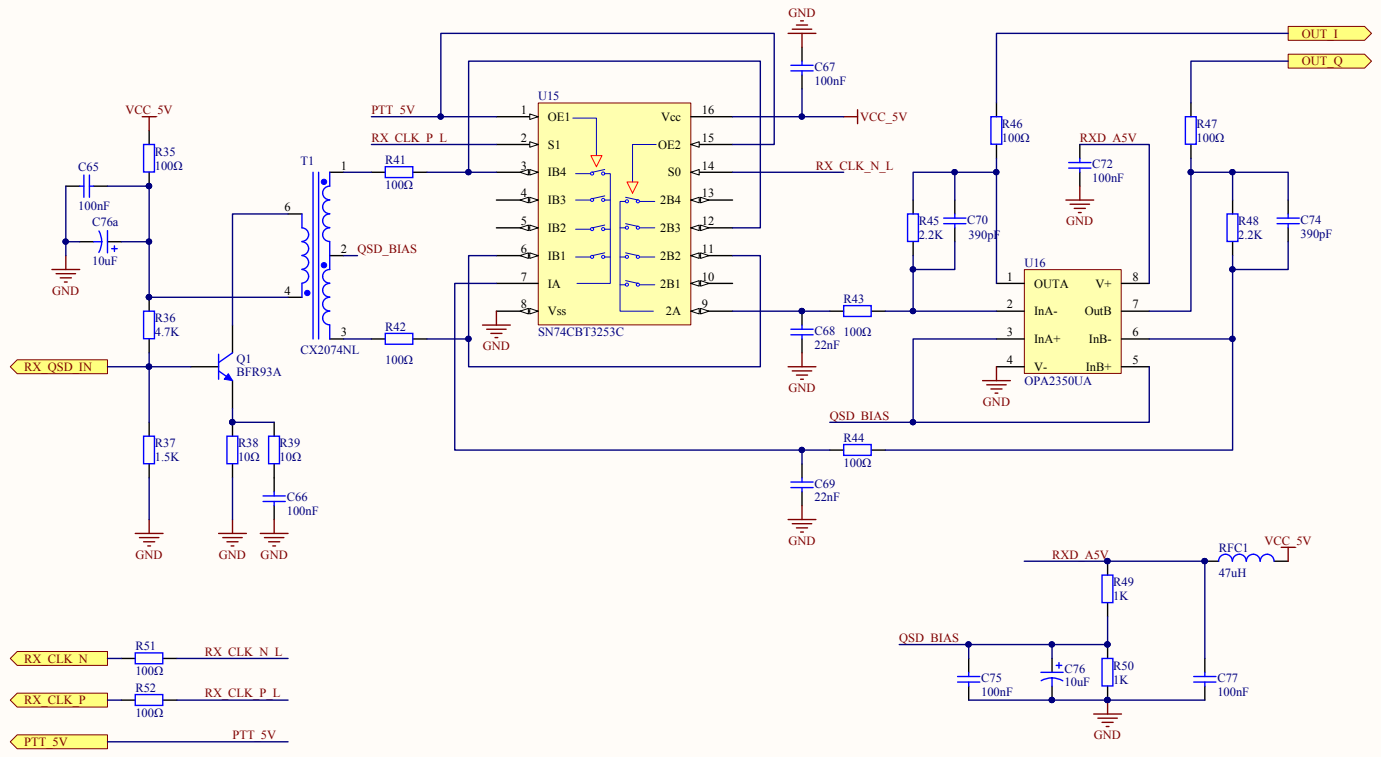

Title		
Size A4	Number	Revision
Date: 2017/10/5		Sheet of
File: D:\Project\..\rf_rxd.SchDoc		Drawn By: